MENEGOTTI TECHNICAL MANUAL

CONCRETE MIXER 400L
RENTAL W/CHASSIS HD

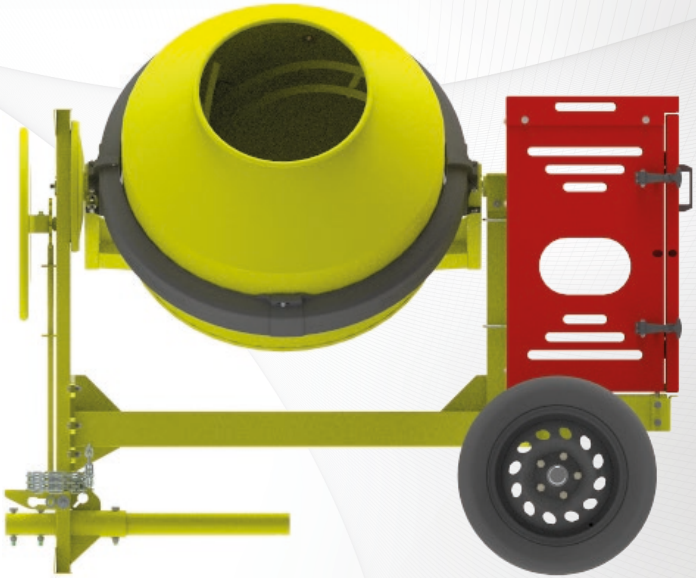

Illustrative image.

QR-Code:

Point your cell phone or tablet camera to access the updated version of **Technical Manuals** and **Parts Catalogs** online, or click the link below to access the website.

www.mgtamerica.com

Attention:

Before operate **Menegotti equipament**, read this **technical manual**, itself will inform and instruct the operator about the operation.
By the way, you avoid possible working accidents and early maintenance on at the equipment.

MENEGOTTI
NORTH AMERICA

Congratulations, you have just purchased a Menegotti product!

With the highest quality, projected and built especially to serve your needs.

This manual was elaborated to provides the informations and key instructions to use and mantain our product, in addiction presents their technical characteristics.

Before use the product for the first time, read and pay attention at the informations in this manual.

The product durability only depends the way you treat it in service (operation) and the satisfactory working is consequence of yours regular work carefully.

Menegotti is preparaded to offer you all technical assistance, and attend all your needs about replacement parts.

Welcome, you are part of the huge Menegotti “customers family”.

After sales Departament
and Technical Assistance MENEGOTTI.

Attention: For better comodity, store and keep this manual in a properly spot so it can be easily checked.

Index

Menegotti Group 03
The Product 03
Safety Informations 03
Technical Specifications 04
Main Parts 05
Operation Conditions 06
Cleaning and Conservation 06
Grounding the Equipment 07
Equipment Lubrication 08
Transport, Lifting and Towing 09
Wiring Diagram 10
Equipment Operation 11
Equipment Maintenance 12
Parts List 13
Product Warranty 19
Term of Warranty 19

Menegotti Group

Menegotti is reference in the development of solutions in machines and tools for the Construction machinery, Handling and Lawn | Garden Segments.
A Brazilian company, present in more than 40 countries, has its headquarters in Jaraguá do Sul, Santa Catarina, units in Brazil and in the United States.
With more than 80th years of history, it is in the fourth generation of consistent and successful family management.
National leader in sales of concrete and cement mixers, it stands out in the resale and rental market.
Through its Innovation Program, it fosters creativity and competitiveness, with disruptive actions and partnerships, aimed at continuous professional and business growth.
With an organizational culture that values and encourages its constant professional and personal development, Menegotti is active in sustainable projects, which make its purpose of contribute "to build a better and more sustainable world", a reality.

The **Product**

The Concrete Mixer 11 CuFt was designed for heavy civil construction work. It is composed of a drum with a mixing capacity of up to 11 CuFt. The drum is moved by a drive (electric/diesel/Petrol), which is activated by a driven/drive system with a "V" belt. The unloading system is manual.

• With the aim of constantly improving their equipment, Menegotti reserves the right to change the features of the products without notice.

Safety **Information**

Note: Anyone who performs any type of operation with this equipment must read this manual and the safety instructions.

- Before using this equipment, carefully read this manual and follow the Manufacturer's instructions, such as how to reduce the risk of accidents in operation;
- It is expressly prohibited to remove or alter any safety device or characteristic, should this occur MENEGOTTI will not be held responsible;
- Use the equipment according to the instructions in this manual;
- In the case of damaged or missing parts, contact MENEGOTTI by phone at 770-910-7450 for replacement of same;
- With the machine turned off, conduct a daily inspection of the machine parts. In the case of problems, immediately contact the MENEGOTTI authorized service;
- Maintain a limited area exclusive for working with the equipment, always keeping the place clean, without obstructions and with good lighting;
- The operator must be trained or qualified to operate this equipment;
- Do not use clothing that is too loose and which might get caught in the machine;
- Always use gloves, safety goggles and ear protection;
- The engines must be installed by qualified professionals;

- Perform the maintenance recommended in this manual with qualified people and within the stipulated periods;
- Inspect all electrical extensions, mainly for cuts, cable friction and broken connections;
- Never use extensions that are not in good condition;
- Never use wet extensions or operate in wet environments;
- When cleaning the equipment, never throw water on the engine;
- Whenever performing maintenance on this equipment, disconnect the power cable from the source;
- Avoid contact with hot surfaces;
- Before performing any activity or maintenance, first let the engine cool down;
- Avoid contact with rotating parts.

Technical **Specifications**

SPECIFICATIONS	CONCRETE MIXER 400L
Total Drum Volume	14 CuFt
Output Capacity (Mixed)	11 CuFt
Drum Rotation	30 Rpm
Number of Cycles/Hour	15
Production per Hour	164 CuFt
Drive Capacity	Combustion: 7 HP
Power Supply	Combustion: Gasoline
Weight without Engine and Wheel	530 Pounds
Dimensions (H x L x W)	1576 x 1940 x1278 mm

* Consult availability and instruction for changing switch selector to electrical supply.

Main **Parts**

POS.	DESCRIPTION
1	Drum
2	Steel Yoke
3	Engine Box
4	Chassi
5	Wheel

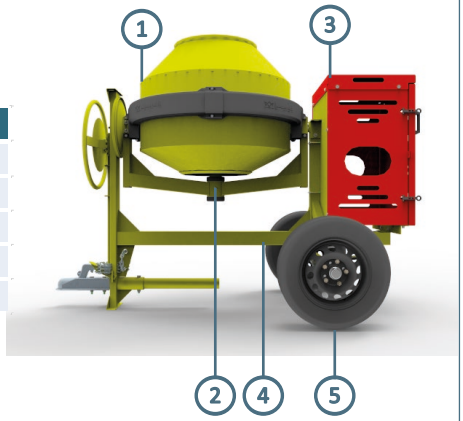

Equipment supplied with Eletric Engine

• Before switch on your concret mixer, check if the supply voltage corresponds to the voltage indicated on the identity plate of the electric engine. Switching on the engine when connected to different voltage from the voltage indicated on the identity plate of the electric engine will result in damage to the engine;

• For without voltage selector equipment, contact the authorized service prior to any change;

• The engine drive in a different voltage on the electric engine plate results in engine damage;

• Make sure circuit breakers, electric cables, sockets, grounding are compatible with the specified engine;

• Accepted voltage variation must not exceed variations above or below 10%, otherwise running failures may occur or even burning of the engine;

• For use of an extension electric, please check the table on page 06.

Equipment supplied without Electric Engine

The engine installation, electrical appliances and their installations and grounding must be made in accordance with current standards in the region and accompanied by a responsible qualified function. In the absence of such standards, should be carried out according to international standards, doubts when installing contact the authorized service.

Equipment supplied with Combustion Engine

• Never inhale exhaust fumes as this can be harmful to your health;

• The Carbon monoxide from the exhaust of internal combustion engines can cause death if used in confined spaces;

• Do not operate or refuel the gasoline or diesel engine in a confined space without sufficient ventilation;

• Do not fuel the equipment when the engine is hot, this could become very dangerous and ensure that there is sufficient ventilation during this procedure;

• Do not touch the engine when it is running as it can burn your skin;

• Use fuel according to engine model;

• Do not use fuel of doubtful origin;

• To prevent electric shock, never touch the spark plug while the engine is running;

• The correct use, cleaning and maintenance of combustion engines must always be in accordance with the instructions contained in the manual of the engine manufacturer.

Operation **Conditions**

• Concrete mixers can be used in both indoor and outdoor environments;
• When filling a concrete mixer with a spade, do not place the spade inside the drum;
• Improper use of this equipment, other than that for which it was projected, can offer a physical threat to the operator;
• Read this instruction manual carefully;
• The operator must be trained or qualified to use this equipment;
• Set aside an exclusive area for working with the equipment. Keep this area clear of obstacles and well lit at all times;
• Whenever performing maintenance on this equipment, disconnect the cable from the power supply.
• Pneumatic wheel rim 14" calibration: between 26 and 30 p.s.i (pound force per square inch);
• For use of an extension electric, we recommend the table:

CONCRETE MIXER 400L			
Extension electric	0 to 66ft	66 to 99ft	above 99ft
Gauge of the electric wire	10 AWG	8 AWG	not recommended

Noise level during operation:

Since the noise level during mixer operation, with the addition of stone and gravel into the drum to simulate a maximum noise level, can reach up to 95 decibels, the use of ear protect ion is recommended during prolonged operation.

Cleaning and **Conservation**

• It must be disconnected from the mains and the cleaning operation is always performed at the end of utilization;
• Cleaning the drum with water, removing any residue of the blades and all internal and external part of the drum;
• Clean the rack and pinion, removing all abrasive material to components;
• Do not put water on electrical components and engine.

Grounding the **Equipment**

• Correct grounding of the concrete mixer is vitally important in reducing the risk of electrical shocks;
• Thus, before switching on your concrete mixer, make sure that the socket has a ground pin and that this is correctly installed. If your socket is not grounded, arrange for a ground to be installed before using the concrete mixer;
• Should use copper rod length and recommended depth of 2 meters;
• The ground wire to pass through the on/off switch should not be interrupted or connected to contacts;
• Do not connect the ground wire directly into the mixer neutral wire mains;
• Grounding must be made according to the standards in the region and accompanied by a responsible qualified function. In the absence of such standards, should be carried out according to international standards, doubts when the installation please contact your authorized service.

Standardization of plugs and sockets 32A 220V/380V.

Grounding point in the engine.

Grounding point in the machine.

Equipment **Lubrication**

• Keep machine rotating parts lubricated, such as: bushings, bearings, and bearing supports;
• Lubricate the equipment at the beginning of operation, applying grease to all lubrication points;
• Lubrication of the pinion/rack gear assembly is not recommended due to the fact that aggregates such as sand, cement and gravel dust, among others, can adhere to the lubricating agent, causing the mixture to become extremely abrasive, thus resulting in premature wear;
• When lubricating the pinion shaft bearing (03), the concrete mixer drum must be in a position where the steel yoke arm is perpendicular (90°) in relation to the machine column and the drum mouth must be turned to the same side where the grease fitting is. If not, the bearings will not be lubricated;
• Lubricate the equipment at the beginning of operation, applying grease to all lubrication points;
• Grease the wheel hub every 1000 miles.

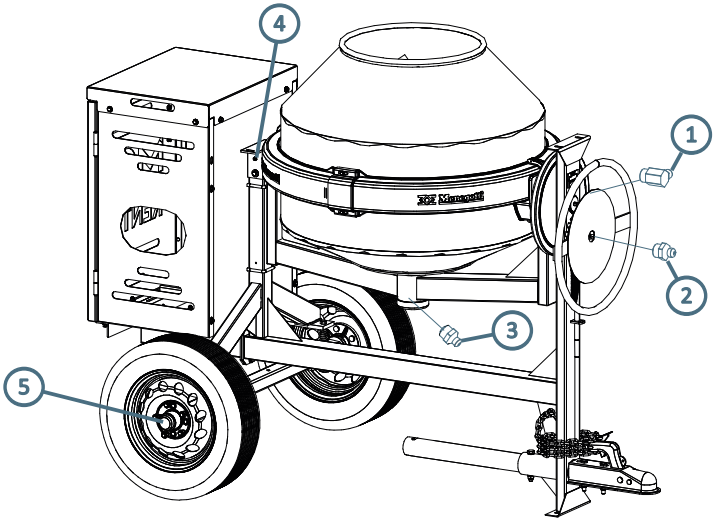

RECOMMENDED GREASES
Ipiranga Ipiflex Li EP2
Mobil Mobilux EP2
Shell Gadus S2 V220
Texaco Marfac MP2
Lubrax Autolith 2

Greasing the Wheel Hubs

1- Using the plier for dust cap and the hammer, remove the dust cap from the wheel hub.

Note: If you do not have the plier, you can use a flathead screwdriver.

2- With the dust cap removed, check the grease on the wheel hub, they find the **grease fitting.**

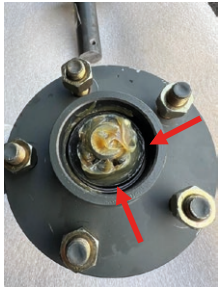

Note: Pay attention to the parts **without** grease.

3- Using the grease gun, attach the tip to the grease, and then start pumping grease into the wheel hub until it looks like the picture below.

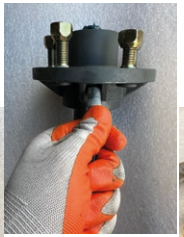
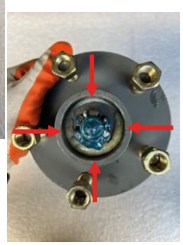

4- Using the rubber mallet (dead blow hammer), close the wheel hub with the dust cap.

Note: If you want, you can use Loctite 271, in order to not let the dust cap fall of the wheel hub, but you will have to clean the borders of the dust cap to make it more efficient.

Transport, Lifting and **Towing**

- It has yoke just to raise a few centimeters of soil and carry through the movement of the wheels;
- They should be used by tilting, with the drum facing down, while maintaining the flatness of the mixer;

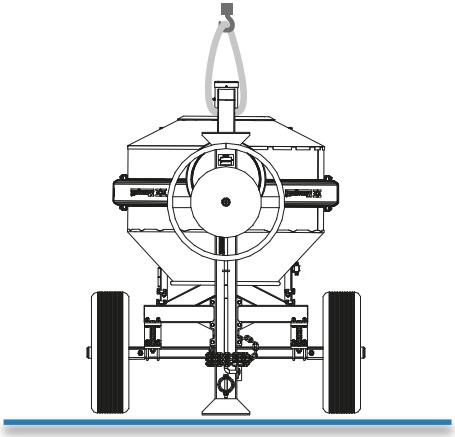

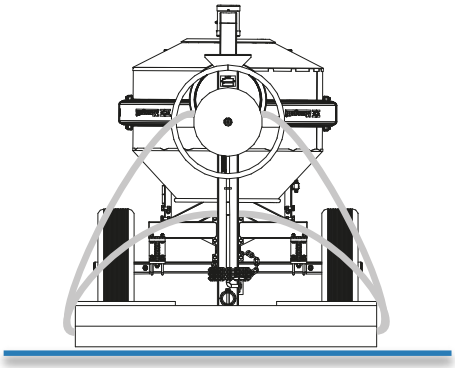

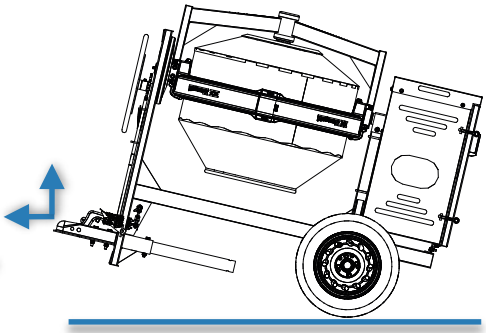

Towing

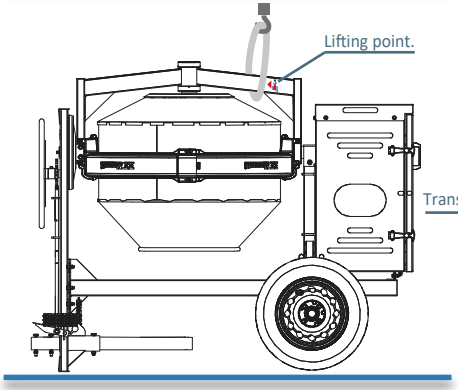

Lifting

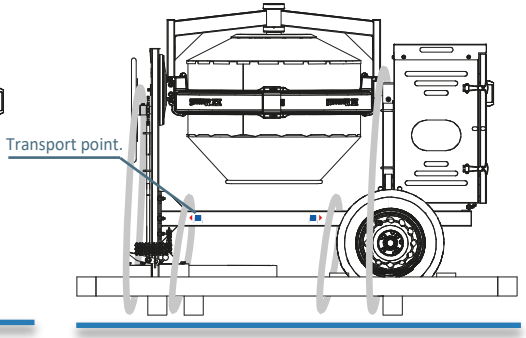

Transport

Poly Drum **Assembly**

• To replace the metal drum with the poly drum, the drum and the gear segments of the concrete mixer must be removed.

1. Assemble the poly drum mounting structure (spider) on the steel yoke of the concrete mixer, as shown in the images below.
2. Tighten the central bolt (torque of 600Nm).

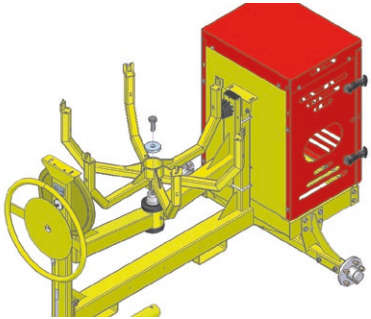

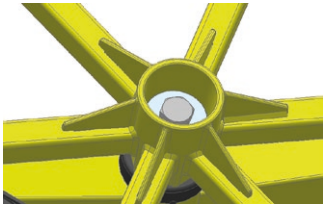

3. Assemble the rack segments. Adjust the rack so that the distance between the rack and the pinion tooth is Ø5mm.

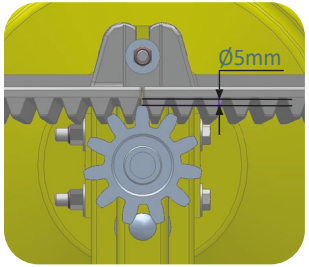

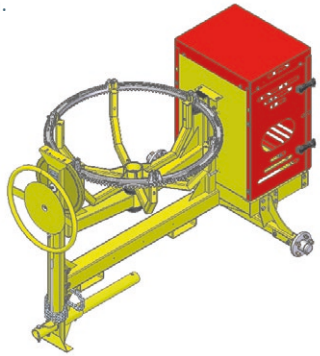

4. Fit the drum into the concrete mixer.
5. Center the drum relative to the 'spider' structure.
6. Drill the structure perpendicularly with a Ø10mm drill bit.
After the first hole, insert a French screw to serve as a guide and position the drum relative to the structure.

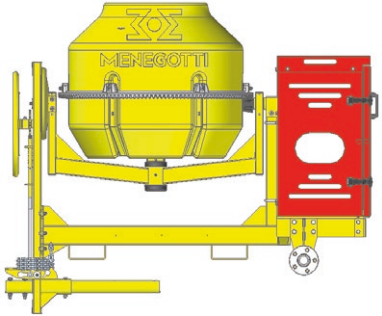

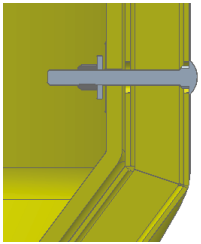

7. Drill the opposite side of the structure relative to the first screw, ensuring that the drum is once again centered. Then, drill the holes for the remaining screws, following the same alternating procedure to maintain the drum's centralization relative to the structure.

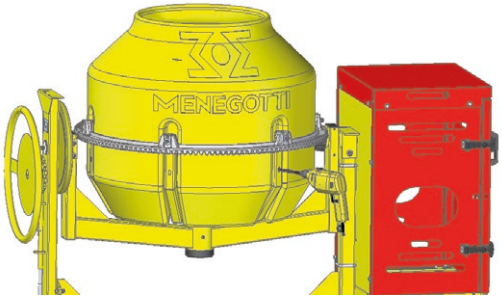

ATTENTION! Always check for equal lateral spacing between the drum and the structure.

8. Assemble the blades inside the drum, securing them at the base along with the screw that fastens the drum.

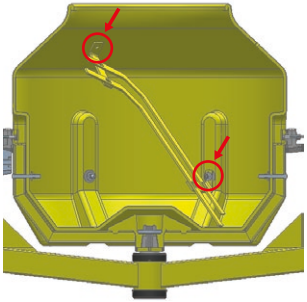

9. Position the upper fastening base of the blade near the drum's nozzle, using the external marking on the drum as a reference to drill the hole.
10. Drill through the upper base of the blade, from the inside to the outside. Install the remaining blades according to the previous instructions.

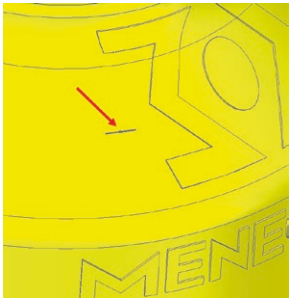

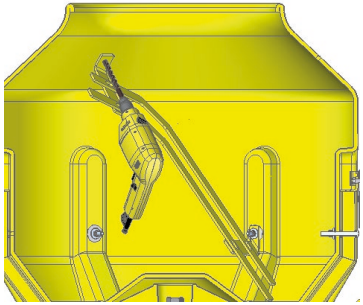

11. The installation direction (blade angle) should be done counterclockwise, as seen from the top view of the concrete mixer.

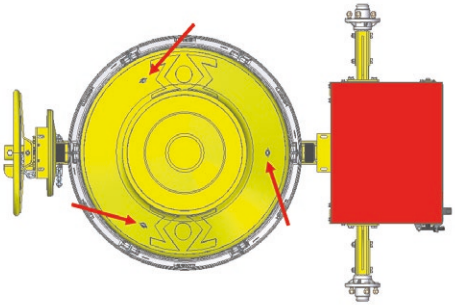

12. Install the rack protection cover.

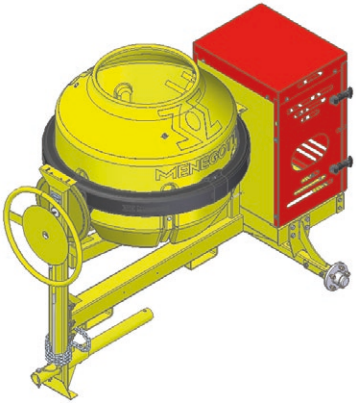

Note: If it is necessary to remove the polymer drum from the spider, before performing the service, a positioning marking between the drum and the spider should be made to prevent losing the alignment of the fastening holes.

Equipment **Operation**

- Position the mixer on a flat, firm surface, so that facilitates the process of loading and unloading;
- Turn the switch that is attached to the engine enclosure;
- tilting the drum to the desired angle. This movement should be done by turning the steering wheel and at the same time stepping on the pedal, unlocking the swivel rocker;
- Set the desired angle and lock again, this movement occurs when the pedal is released;
- Load the drum and let blending;
- Once the mixture, tilting the drum to dump all the dough;
- Throughout the cycle the drum must be spinning or whatever equipment is always on.

Illustrative images and orientative information

1. Make use of a measure (bucket) to quantitate the components.

2. Add the aggregate (gravel) in the cement mixer on.

3. Make use of a measure (bucket) to quantitate the components.

4. Add the cement.

5. Finally add the sand and the rest of the water.

6. Let the concrete mixer rotate for 2,5 minutes before using the concrete.

Equipment **Maintenance**

Rack Gear Replacement

- Remove the damaged rack gear screws (07), and replace them according to assembly recommendations;
- Use two Ø 5 mm pins (C) to adjust the gap between teeth, necessary for the perfect running of the pinion and rack gear;
- Adjust the alignment between the rack gear and pinion by reference face “A”, (07) (42) compensating the difference with flat washers.

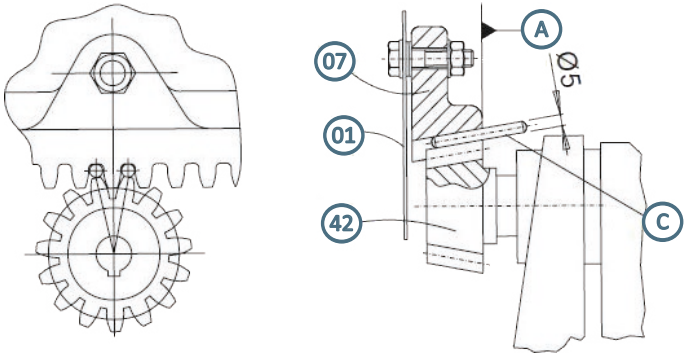

Parts **List**

Engine Box

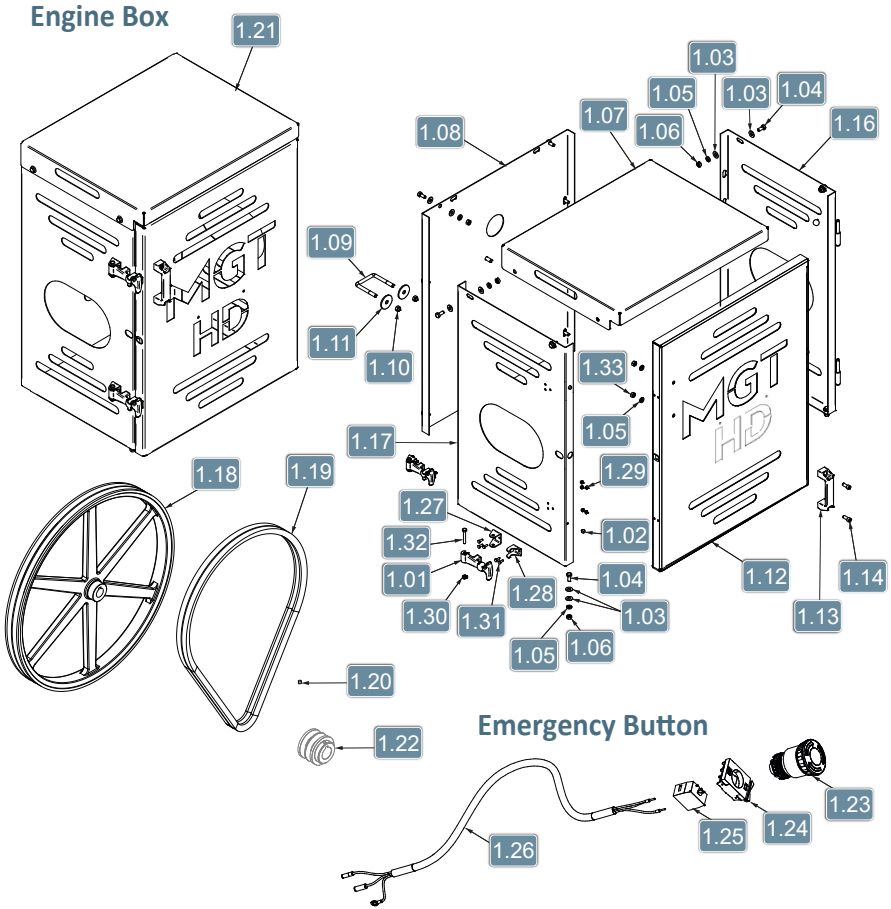

POS.	DESCRIPTION	QTY.	CODE	DRAWING
1.01	Rubber Door Latch	2	24030255	4122581
1.02	Stop Rubber	2	24030222	4122072
1.03	Flat Washer 5/16"	24	21030252	-
1.04	Hex. Bolt 5/16"X3/4"	12	21010268	-
1.05	Spring Washer 5/16"	12	21030112	-
1.06	Self Locking Hex Nut 5/16"	12	21021058	-
1.07	Top Cover	1	32420059	3108299
1.08	Upper end	1	32420077	3108373
1.09	U-Bolt 3/8"	2	21012480	4108003
1.10	Self Locking Hex Nut 3/8"	4	21021059	21021059
1.11	Flat Washer	4	30100070	4107003
1.12	Door	1	33108453	3108453
1.13	Handle	1	24070164	4122435
1.14	Hex. Bolt 5/16"X3/4"	2	21010523	-
1.16	Right Side	1	23108437	3108437
1.17	Left Side	1	23108466	3108466
1.18	Pulley Ø450MM	1	29112206	3108301
1.19	V-Belt A-67 11CuFt (400L)	2	22010150	-
1.20	Bolt 1/4" X 1/4"	1	21010919	-
1.21	Engine Box	1	3108454	3108454
1.22	Pulley Ø60MM	1	31090268	4109069
1.23	Emergency Button	1	26160132	-
1.24	Flange (Emergency Button)	1	26160155	-
1.25	Contact Block NA BC10F-CSW X100	1	26160146	-
1.26	Cable (Emergency Button)	1	26010436	4122579
1.27	Fixed Beam Rubber Holder	2	29117877	4122582
1.28	Movable Beam Rubber Holder	2	29117878	4122583
1.29	Hex Nut 3/16"	10	21021002	-
1.30	Self Locking Low Hex Nut 1/4"	2	21021004	-
1.31	Hex. Bolt 3/16"x 1/2"	10	29117880	-
1.32	Hex. Bolt 1/4"x 1.3/4"	2	29117879	-
1.33	Hex. Bolt 5/16”	2	21021052	-

Steel Yoke

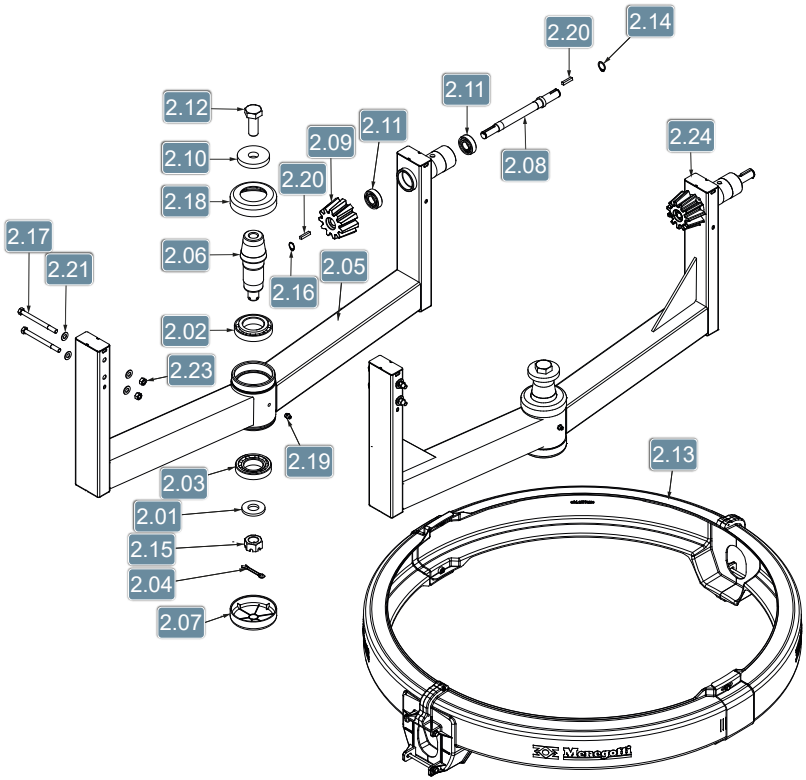

POS.	DESCRIPTION	QTY.	CODE	DRAWING
2.01	Flat Washer DN26	1	30100079	4122006
2.02	Bearing 30210	1	22020608	-
2.03	Bearing 30209	1	22020607	-
2.04	Cotter Pin 3/16"X1.1/2"	1	21050106	-
2.05	Steel Yoke 11 CuFt 400L HD	1	32460057	3106049
2.06	Central Axis	1	3114039	3114039
2.07	Cover	1	24110102	4122007
2.08	Pinion Shaft	1	31020026	3114002
2.09	Pinion Z-11	1	31030007	3123001
2.10	Drum Washer	1	21030232	4122008
2.11	Bearing 6204	2	22020206	-
2.12	Hex Bolt 7/8"x 2.1/4"	1	21013442	-
2.13	Kit Protection Rack Gear Plastic	1	32030067	3119147
2.14	Elastic Ring E-20	1	21060118	-
2.15	Castle Nut 1"	1	21020959	-
2.16	Elastic Ring E-17	1	21060115	-
2.17	Hex Bolt 3/8"x 4.1/2"	2	21010250	-
2.18	Cover with Hole	1	24110168	4122183
2.19	Grease Fitting 1/8" Straight	1	24040101	-
2.20	Key 6X6X30MM	2	30160002	4122009
2.21	Flat Washer 3/8"	4	21030251	-
2.23	Hex Nut 3/8"	2	21021059	-
2.24	Kit Steel Yoke	1	32460010	-

Drum

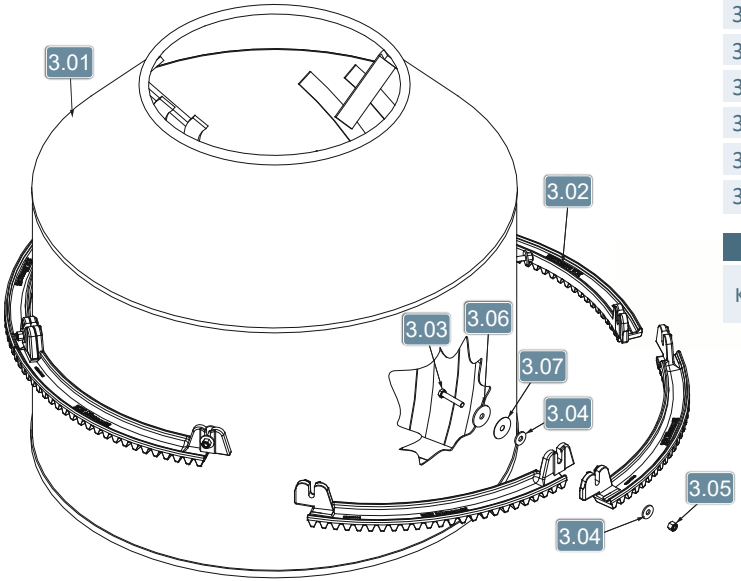

POS.	DESCRIPTION	QTY.	CODE	DRAWING
3.01	Drum 400L HD (11CuFt)	1	34600038	2107004
3.02	Segmented Rack Gear	6	31180004	2124011
3.03	Hex Bolt 3/8"X2.1/4"	6	21013824	-
3.04	Flat Washer 3/8"	12	21030230	-
3.05	Hex Nut 3/8"	6	21021059	-
3.06	Drum Washer	6	30100070	4107003
3.07	Sealing Washer	6	30100114	4107002

POS.	DESCRIPTION	QTY.	CODE	DRAWING
KIT 01	Rack Gear Segmented (3.02 to 3.07) (segmented, washer, nut, bolt)	1	31180013	2124020

Rack Gear Protection

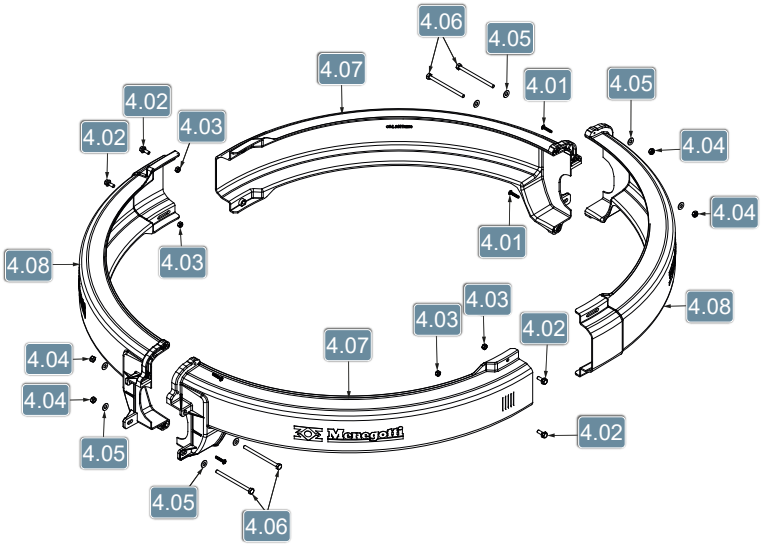

POS.	DESCRIPTION	QTY.	CODE	DRAWING
4.01	Screw M5x25mm	4	21011022	-
4.02	Hex Bolt M6x16mm	4	21012986	-
4.03	Hex Nut M6	4	21021104	-
4.04	Hex Nut 1/4"	4	21021004	-
4.05	Flat Washer 1/4"	8	21030214	-
4.06	Hex Bolt 1/4"X4"	4	21010184	-
4.07	Right - Rack Gear Protection	2	24110200	3119146
4.08	Left - Rack Gear Protection	2	24110199	3119145

KIT 02 - Large Column Assembly

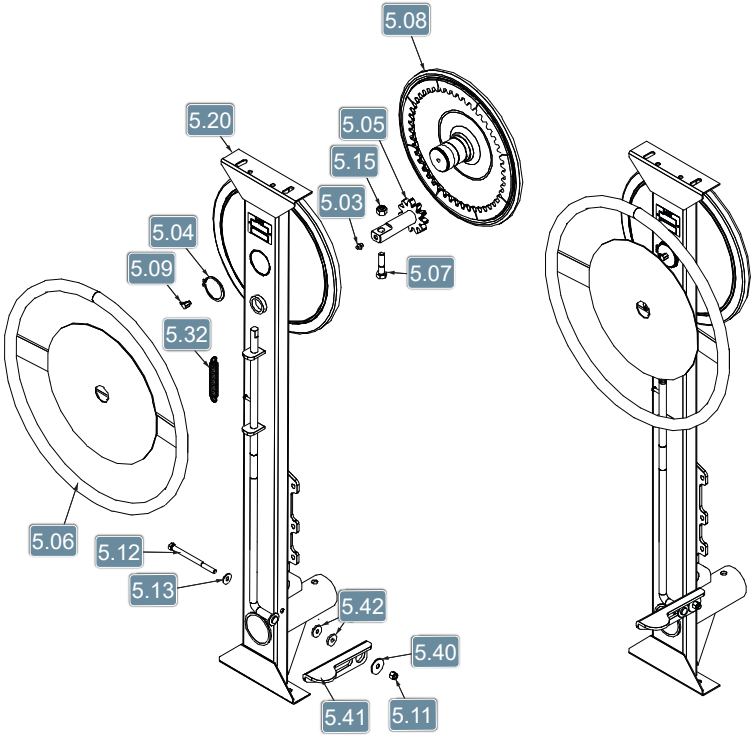

POS.	DESCRIPTION	QTY.	CODE	DRAWING
5.03	Grease Fititng 1/8" Straight	1	24040101	-
5.04	Retaining Ring E-54	1	21060146	-
5.05	Shaft with Gear Z-11 HD	1	31020461	4114087
5.06	Steering Wheel 400L HD	1	31200017	3122170
5.07	Hex Bolt 1/2"x2"	1	21010313	-
5.08	Reducing	1	31220021	3121004
5.09	Grease Fitting 1/8"	1	24040105	-
5.11	Hex Nut 3/8"	1	21021059	-
5.12	Hex Screw 3/8" X 5"	1	21010137	-
5.13	Washer 3/8"	3	21030251	-
5.15	Hex Nut 1/2"	1	21021070	-
5.20	Large Column	1	33110207	310207
5.32	Traction Spring	1	21090116	-
5.40	Flat Washer 3/8"	1	21030233	-
5.41	Removable Pedal	1	4122584	4122584
5.42	Flat Washer 3/8"	2	21030204	-

Chassis

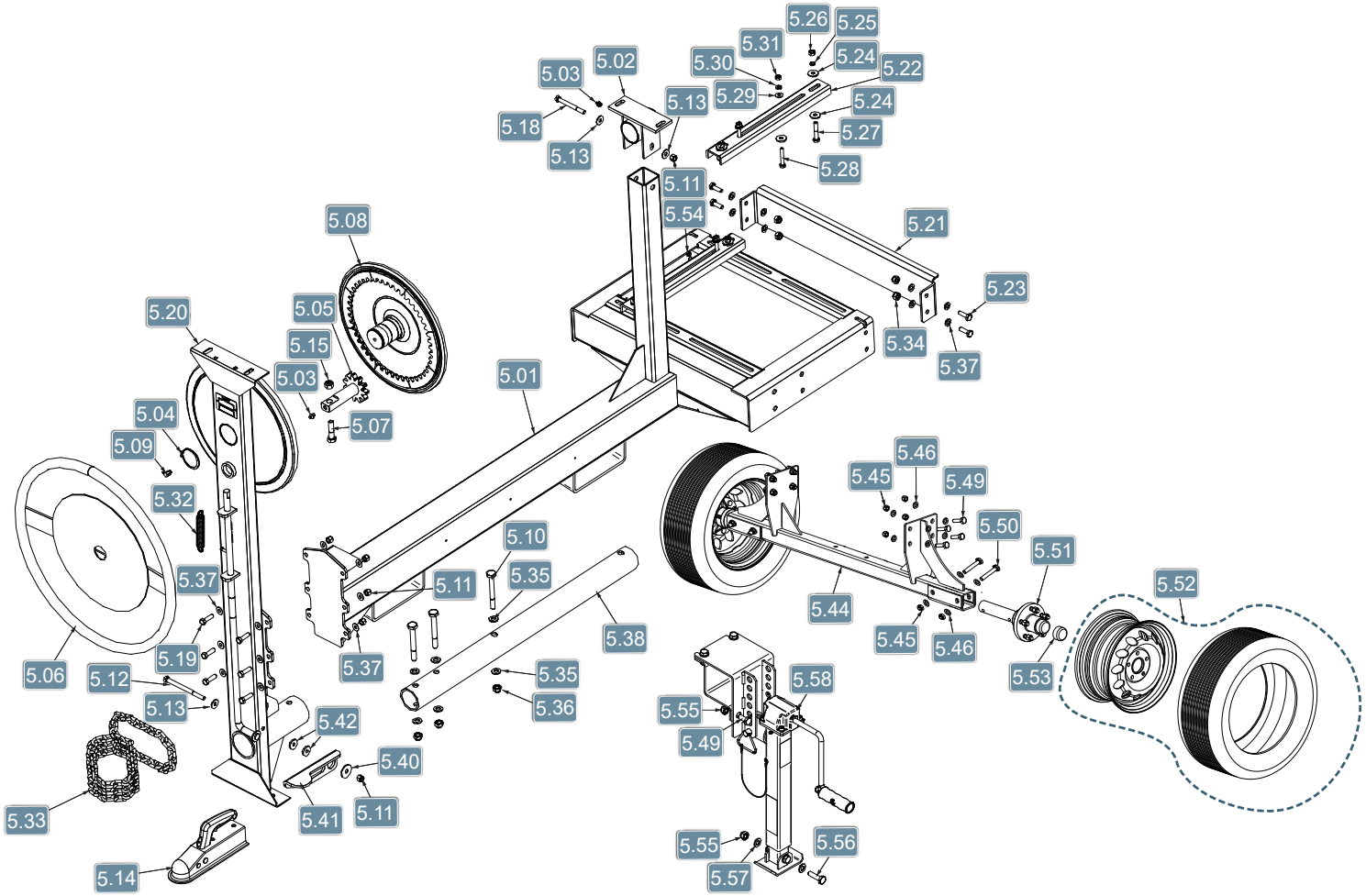
5.26
5.25
5.31
5.24
5.22
5.30
5.03
5.02
5.29
5.13
5.24
5.18
5.27
5.13
5.28
5.11
5.54
5.08
5.21
5.23
5.20
5.05
5.34
5.15
5.37
5.03
5.01
5.04
5.07
5.09
5.46
5.45
5.49
5.32
5.50
5.51
5.10
5.37
5.11
5.35
5.52
5.44
5.38
5.45
5.46
5.19
5.37
5.53
5.06
5.12
5.35
5.58
5.13
5.36
5.55
5.42
5.49
5.40
5.33
5.41
5.11
5.55
5.56
5.14
5.57

Chassis

POS.	DESCRIPTION	QTY.	CODE	DRAWING
5.01	Chassis 400L HD	1	32105151	2105151
5.02	Bearing Support	1	31140055	3116001
5.03	Grease Fitting 1/8" Straight	2	24040101	-
5.04	Retaining Ring E-54	1	21060146	-
5.05	Shaft with Gear Z-11 HD	1	31020461	4114087
5.06	Steering Wheel 400L HD	1	31200017	3122170
5.07	Hex Bolt 1/2"x2"	1	21010313	-
5.08	Reducing	1	31220021	3121004
5.09	Grease Fitting 1/8"	1	24040105	-
5.10	Hex Bolt M12 x 100mm	3	21012741	-
5.11	Self Locking Hex Nut 3/8"	8	21021059	-
5.12	Hex Screw 3/8"x5"	1	21010137	-
5.13	Flat Washer 3/8"	3	21030251	-
5.14	Trailer Coupling	1	3122537	3122537
5.15	Hex Nut 1/2"	1	21021070	-
5.18	Hex Bolt 3/8"x3.1/2"	1	21013826	-
5.19	Hex Bolt 3/8"x1.1/4"	6	21010265	-
5.20	Large Column	1	33110207	3110207
5.21	Rear Closing	1	3137152	3137152
5.22	Engine Support	2	32060144	3112013
5.23	Hex Bolt M10x30	4	21012816	-
5.24	Thick Flat Washer 3/8"	12	21030230	-
5.25	Spring Washer 3/8"	4	21030163	-
5.26	Hex Nut 3/8"	4	21020117	-
5.27	Hex Bolt 3/8"x2"	4	21010241	-
5.28	Hex Bolt 5/16"x2"	4	21010228	-

POS.	DESCRIPTION	QTY.	CODE	DRAWING
5.29	Flat Washer 5/16"	4	21030252	-
5.30	Spring Washer 5/16"	4	21030112	-
5.31	Hex Nut 5/16"	4	21021052	-
5.32	Traction Spring	1	21090116	-
5.33	Short link chain 1-4 inch	1	22060303	-
5.34	Self Locking Hex Nut M10	4	21021206	-
5.35	Flat Washer M12	6	29110907	-
5.36	Hex Nut BX M12x1,75	3	21021207	-
5.37	Flat Washer M10	20	21030676	-
5.38	Tow Bar Ø2 1/2"x800mm	1	34137179	4137179
5.40	Flat Washer 3/8"	1	21030233	-
5.41	Removable Pedal	1	34122584	4122584
5.42	Flat Washer 3/8"	2	21030204	-
5.44	Wheel Shaft	1	32105150	2105150
5.45	Hex Nut BX M12x1,75	12	21021207	-
5.46	Flat Washer M12	24	29110907	-
5.49	Hex Bolt M12x35	8	21013013	-
5.50	Hex Bolt M12x85mm	4	21012983	-
5.51	Wheel Hub	2	3137123	3137123
5.52	Pneumatic Wheel Rim 14"	2	-	-
5.53	Dust Cap	2	29119518	-
5.54	Torque Flanged Nut 1/4"	1	21021005	-
5.55	Nut M12X1,25	5	21021107	-
5.56	Bolt M12X70	1	21013031	-
5.57	Washer M12	10	21030718	-
5.58	Leveling Foot	1	-	9172001

Drum Structure Assembly

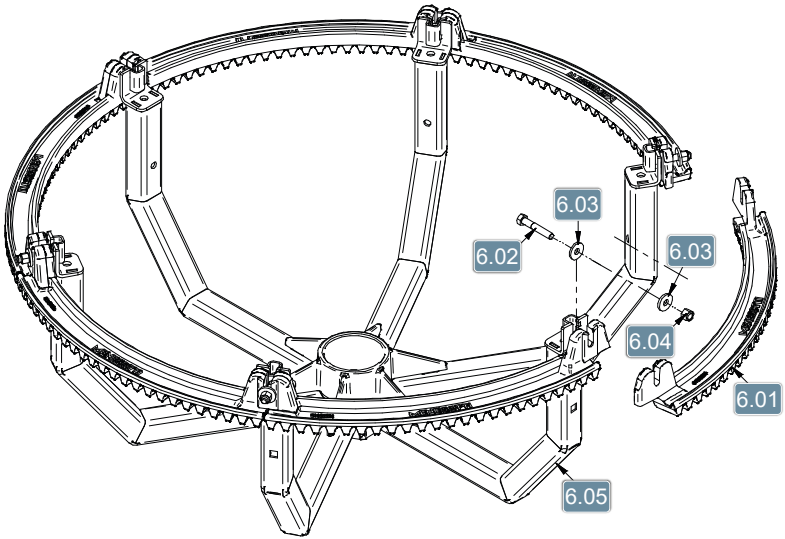

POS.	DESCRIPTION	QTY.	CODE	DRAWING
6.01	Segmented Rack Gear Z-24	6	31180004	2124011
6.02	Hex Bolt 3/8"X2.1/4"	6	21013824	-
6.03	Flat Washer 3/8”	12	21030204	-
6.04	Hex Nut 3/8”	6	21021059	-
6.05	Drum Structure	1	37175101	7175101

Poly Drum

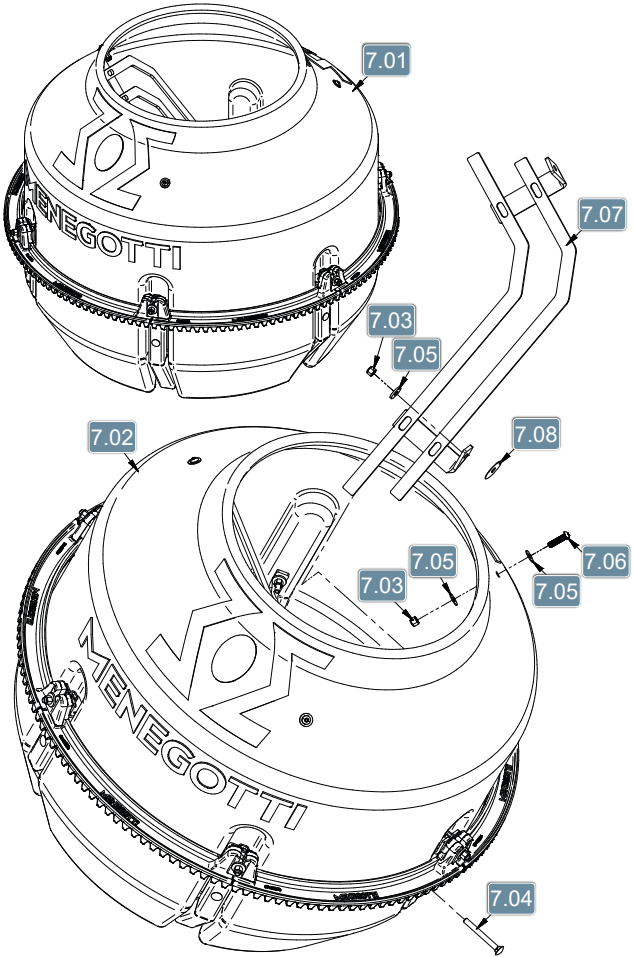

POS.	DESCRIPTION	QTY.	CODE	DRAWING
7.01	KIT Poly Drum 400L HD - 11CuFt (Yellow)	1	39175001	9175901
7.02	Poly Drum 400L HD (Yellow)	1	5175105	5175105
7.03	Hex Nut 3/8"	9	21021059	-
7.04	French Screw 3/8" x 3 1/2"	6	21011112	-
7.05	Flat Washer 3/8"	12	21030204	-
7.06	Internal Hex Screw 3/8"	3	21010616	-
7.07	Drum Blade Structure (01 unit)	3	7175104	7175104
7.08	Guarnital Sealing Washer	6	30100114	4107002

Product Warranty

The conditions and terms of this warranty are non transferable and go into effect on the date of purchase of this equipment, proven by presentation of the sales invoice issued to the first end user. At the time of delivery of the equipment, the customer must be provided with the information and technical orientations according to the contents of this manual.

Not, however, included in this warranty are defects arising from improper use, negligence, imprudence or malpractice, nor are repairs or alterations to any part and/or component of the equipment. Also not included are: the assembly of any sets of parts by technicians not from the Factory itself or from an Authorized Technical Assistant, application other than which it was specified, mechanical or electrical overloading as well as lack of phase, use in environments for which it was not designed, incorrect voltages and frequencies, incorrect lubrication, damage caused by accidents of any nature, such as floods, gales, fire, landslides or due to transportation.

Removal or any alteration to the series numbers originally placed on the product will render the warranty null, where the Sales invoice and Warranty Certificate must be presented in relation to the equipment in question.

This warranty is limited to the repair, replacement of parts or assembly of parts in which, through examination by a Menegotti Authorized Technical Assistant with prior authorization from the Factory, any manufacturing defect will be verified. This repair or replacement will be performed by the authorized Technical Assistant, where the purchaser will be responsible for risks and expenses arising from transport to and from the authorized Technical Assistant, and where labor and parts will not be charged according to the terms of this warranty.

This warranty replaces any other warranty, implicit or explicit, as well as all any obligation or responsibility on the part of our company in relation to the above mentioned product.

MENEGOTTI Post Sales Department and Technical Assistance.

Term of Warranty

By the present CERTIFICATE provided from original purchaser, Menegotti guarantees this product against manufacturing defects, for a period of 12 (twelve) months, counted from the invoice issue date of the first final consumer. This equipment's warranty does not include components worn out by use, such as: bearings, steel cable, electrical plugs, gears and engine breaking.

This warranty includes the replacement of parts and repairs due to manufacturing defects duly noted by the factory or Authorized Technical Assistant. This warranty will be rendered null and void in the case of damages arising from accidents, acts of nature, application other than which it was designed, connection to improper electrical supply or subjected to extensive power fluctuations, or, if opened by persons or workshopsnot authorized by Menegotti.

The consumer will be responsible for freight expenses for transporting the product to the technical assistant or factory. The equipment includes and electric motor and this warranty covers internal defects in the motor originating from its manufacture. Defects not covered in this warranty include: overloading due to lack of or excessive phase, use of voltage outside that specified, broken or crushed casing due to negligence during transporting /or storage, coupling or energizing outside specifications and general defects from improper use and/or incorrect installation.

In agreement with these terms,

Customer:_____
Model:_____ **Serial Number:**_____
City:_____ **Date:**_____

Customer

Menegotti Authorized Service

Menegotti GROUP

Solid values, sustainable future.

MENEGOTTI® HANDLING

MENEGOTTI® CONSTRUCTION

MENEGOTTI® HOUSE & GARDEN

REV. 12 | FEBRUARY/2026 | CÓD. 24051155

Unit • *Unidad* **Menmaq**
Erwino Menegotti, 381 - Água Verde
Jaraguá do Sul - SC - 89254-000

Unit • *Unidad* **Mentec**
José Theodoro Ribeiro, 2399 - Ilha da Figueira
Jaraguá do Sul - SC - 89258-468

Unit • *Unidad* **Menfer**
Saudade, 186 - Seminário
Corupá - SC - 89278-000

Unit • *Unidad* **MNA**
248 E Crogan St STE 301 - Lawrenceville - GA
30046 - United States

grupomenegotti.com